ITEM NO.	PART NUMBER	DESCRIPTION	QTY.
1	13363	SHAFT	1
2	04258	EXT. RETAINING RING	3
3	04259	INT. RETAINING RING	2
4	12211	BALL BEARING	2
5	05133	SPACER	1
6	04264	FLAT WASHER	1
7	12314	TYPE 6A SEAL/SEAT ASSY	1
8	12328	BODY - MACHINED	1
9	12855	GASKET	1
10	12856	WEAR PLATE	1
11	04432	WOODRUFF KEY	1
12	12303	HOUSING	1
13	09959	RUBBER IMPELLER	1
14	12231	O-RING	1
15	19995	SCREW 1/4-20 ROUND HD	1
16	19996	CAM WASHER	1
17	15883	CAM	1
18	12710	LOCKWASHER	3
19	12857	1/4-20 HHCS	3
20	19729	PULLEY - STEEL	1
21	13285	TAG	1
22	23083	LABEL	1

PART NUMBER G21

ASSEMBLY NOTES:

1. APPLY BEAD OF PERMATEX AROUND THREADED HOLE IN CAM, ITEM 17.
2. USE WATER ONLY WHEN INSTALLING TYPE 6A SEAL/SEAT ASSY, ITEM 7.
3. USE COOLANT TO AID IN INSTALLATION OF RUBBER IMPELLER, ITEM 13.
4. TORQUE 1/4-20 HHCS TO 5 - 8 FT/LBS.
5. PRESSURE TEST PUMP AT 20 - 30 PSI.
6. PRINT ON LABEL, ITEN 22
   G21
   DATE CODE

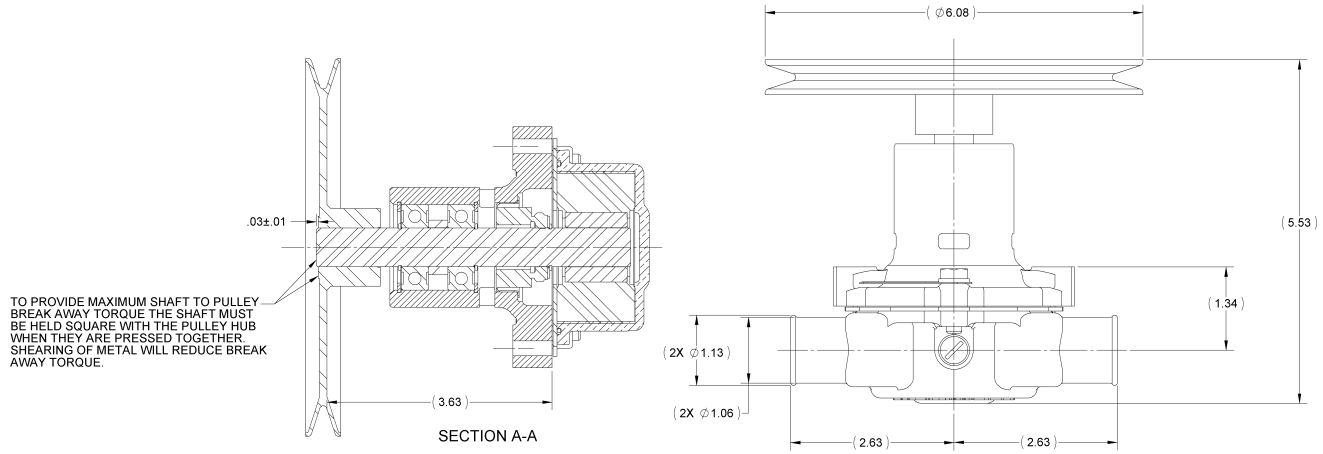

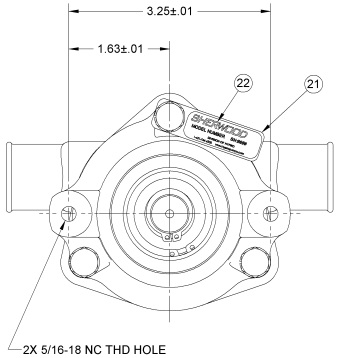

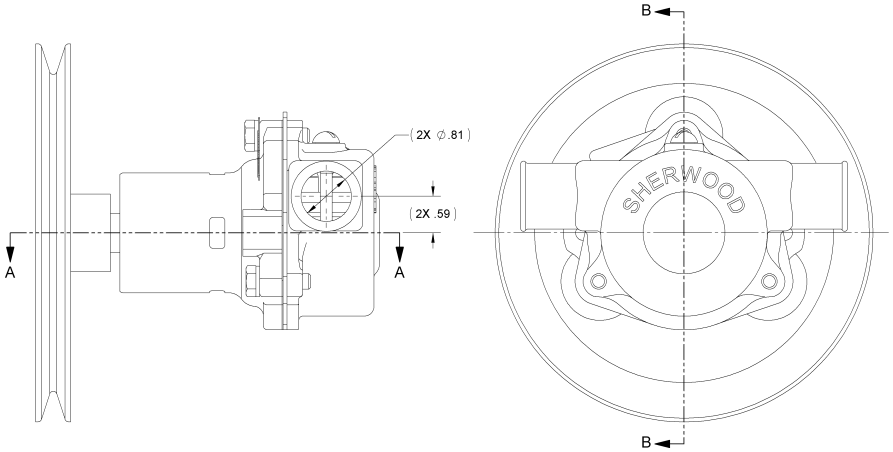

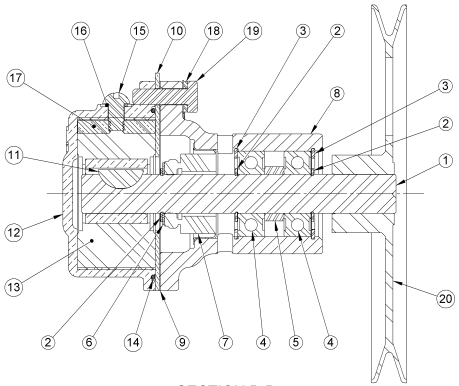

SECTION B-B

REV.	ECN	REVISION DESCRIPTION	CHKD	DATE
P	6527	REMOVE 12356, SEAT ASSY, 10615C CAM SCREW ASSY, ADD 19995 CAM SCREW, 19996 CAM WASHER, REDRAWN	PEB	11/2/2007

SHERWOOD
A Div. of Hypro Corporation A PENTAIR COMPANY
375 Fifth Avenue NW, New Brighton, MN 55112, (651) 766-6300

REPLACES PART NO.			REV.
DWG BY:	RBM	DATE: 11/12/1980	
CHECKED BY:	RBM	DATE: 11/12/1980	
APPROVED BY:	RBM	DATE: 11/12/1980	
DRAWING BASED ON ASME Y14.5M-1994	DO NOT SCALE PRINT	SIZE D	
THIRD ANGLE PROJECTION	SCALE 1:1	SHEET NUMBER 1 OF 1	

THIS DRAWING IS THE PROPERTY OF HYPRO, AND WITHOUT WRITTEN AUTHORIZATION, MUST NOT BE COPIED OR COMMUNICATED.

PART DESCRIPTION: IMPELLER PUMP ASSY

PART NUMBER: G21 REV: P