| ITEM NO. | PART NUMBER | DESCRIPTION | QTY. |
|---|---|---|---|
| 1 | 13363 | SHAFT | 1 |
| 2 | 04258 | EXT. RETAINING RING | 3 |
| 3 | 04259 | INT. RETAINING RING | 2 |
| 4 | 05133 | SPACER | 1 |
| 5 | 12211 | BALL BEARING | 2 |
| 6 | 04264 | FLAT WASHER | 1 |
| 7 | 12314 | SEAL/SEAT ASSY | 1 |
| 8 | 21153 | BODY | 1 |
| 9 | 12855 | GASKET | 1 |
| 10 | 12856 | WEAR PLATE | 1 |
| 11 | 12857 | 1/4-20 HHCS | 3 |
| 12 | 21757 | LOCKWASHER EXT TOOTH | 3 |
| 13 | 21151 | HOUSING | 1 |
| 14 | 12231 | O-RING | 1 |
| 15 | 15883 | CAM | 1 |
| 16 | 04432 | WOODRUFF KEY | 1 |
| 17 | 09959 | RUBBER IMPELLER | 1 |
| 18 | 19995 | SCREW 1/4-20 ROUND HD | 1 |
| 19 | 19996 | CAM WASHER | 1 |
| 20 | 13285 | TAG | 1 |
| 21 | 23083 | LABEL | 1 |
| 22 | 21154 | PULLEY ASSEMBLY | 1 |

NOTES:

1. APPLY BEAD OF PERMATEX AROUND THREADED HOLE IN CAM PRIOR TO ASSEMBLY, (ITEM 15).
2. USE PAC-EASE, OR EQUIV, WHEN INSTALLING SEAL/SEAT ASSY, (ITEM 7).
3. USE COOLANT TO AID IN INSTALLATION OF RUBBER IMPELLER, (ITEM 17).
4. TORQUE 1/4-20 HHCS TO 5 - 8 FT/LBS, (ITEM 11).
5. PRESSURE TEST PUMP TO 20 - 30 PSI.
6. PRINT ON LABEL, (ITEM 21).
   G9901
   DATE CODE

PART NUMBER G9901

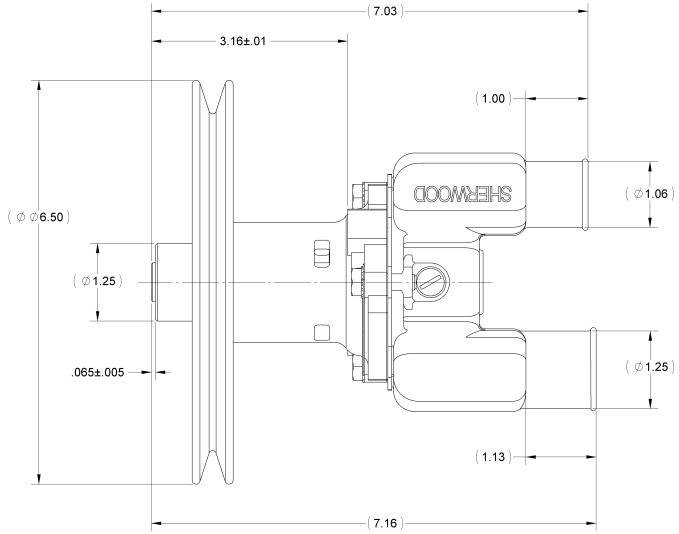


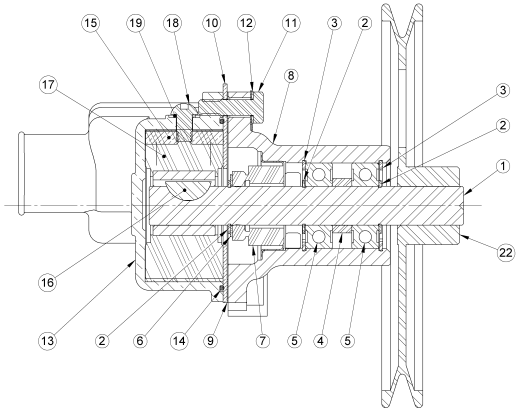


SECTION A-A

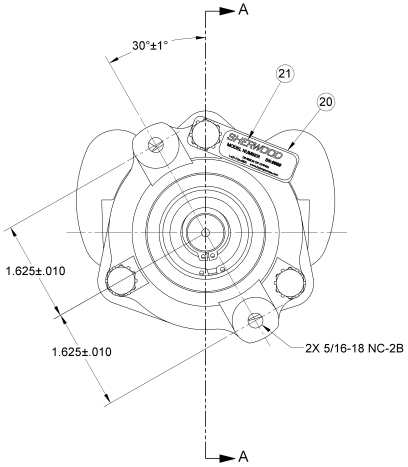


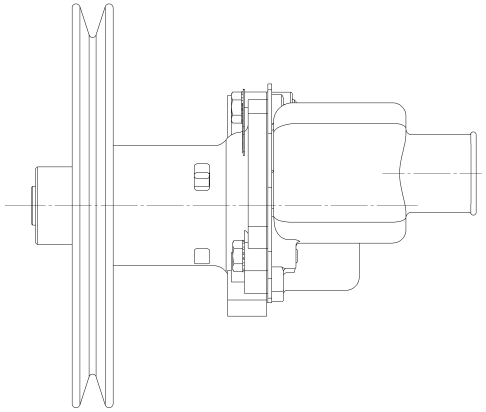

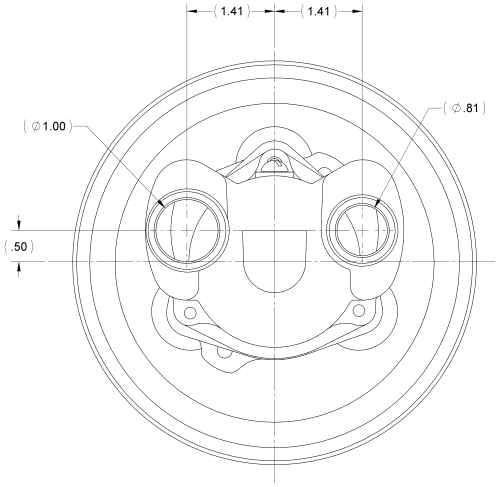


| REV. | ECN | REVISION DESCRIPTION | CHKD | DATE |
|---|---|---|---|---|
| K | 6527 | REMOVED 12256 SEAT ASSY FROM BOM, REDRAWN | PEB | 11/19/2007 |

**SHERWOOD**
*A Div. of Hypro Corporation* **A PENTAIR COMPANY**
375 Fifth Avenue NW, New Brighton, MN 55112, (651) 766-6300

DRAWING BASED ON ASME Y14.5M-1994 | DO NOT SCALE PRINT | SIZE D | THIRD ANGLE PROJECTION | SCALE 1:1 | SHEET NUMBER 1 OF 1

PART DESCRIPTION: RUBBER IMPELLER PUMP ASSY

REPLACES PART NO. | REV.

DWG BY: GM DATE: 11/10/1992
CHECKED BY: KRS DATE: 11/16/1992
APPROVED BY: KRS DATE: 11/16/1992

THIS DRAWING IS THE PROPERTY OF HYPRO, AND WITHOUT WRITTEN AUTHORIZATION, MUST NOT BE COPIED OR COMMUNICATED.

PART NUMBER G9901 REV. K